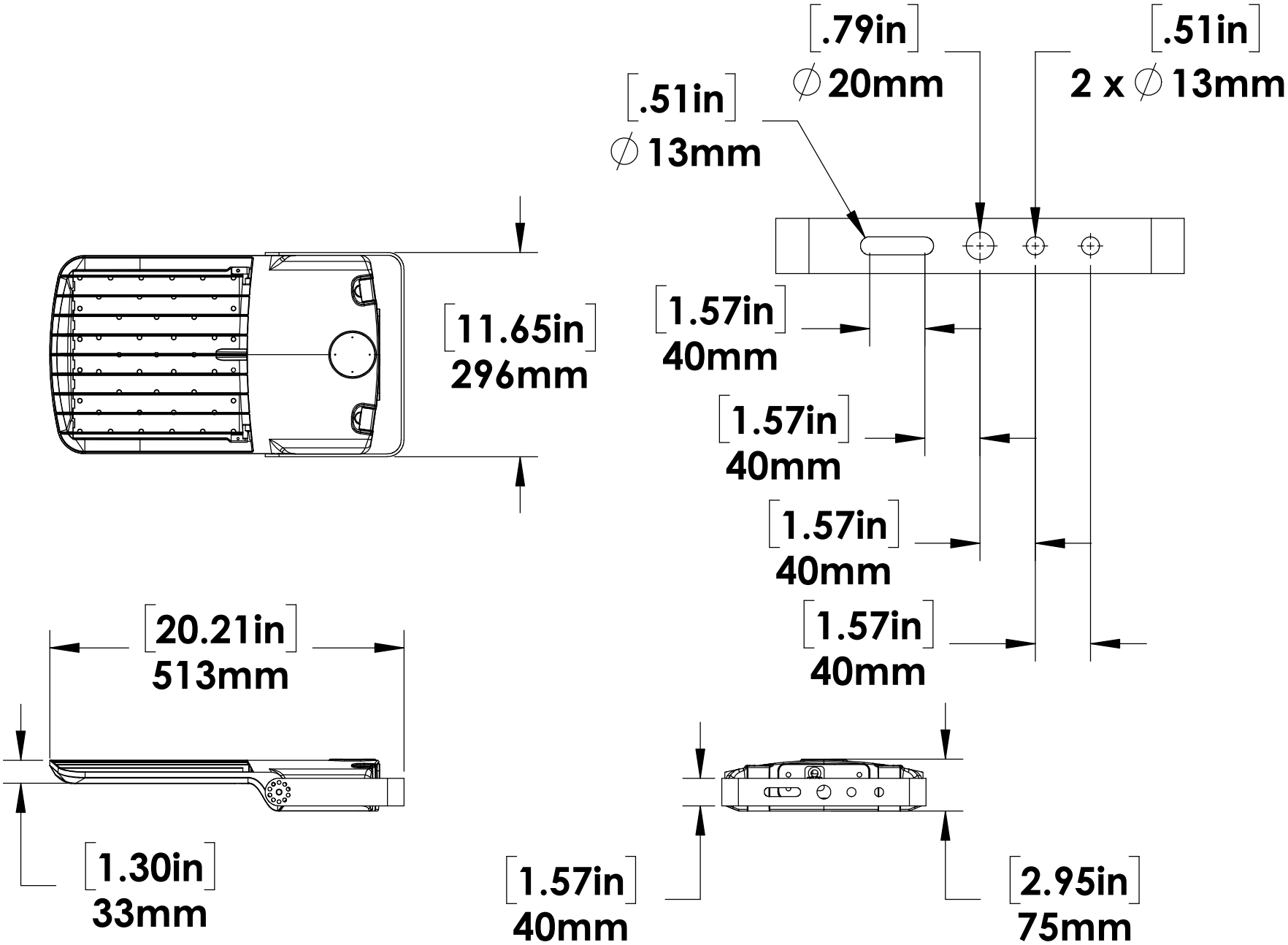
[.79in]
∅20mm
[.51in]
2 x ∅13mm
[.51in]
∅13mm
[11.65in]
296mm
[1.57in]
40mm
[1.57in]
40mm
[1.57in]
40mm
[1.57in]
40mm
[20.21in]
513mm
[1.30in]
33mm
[1.57in]
40mm
[2.95in]
75mm