# CCM-LED80

## COACHMAN SERIES

Post Top LED Area Light

| SPECIFICATIONS | |
|---|---|
| Watts | 82.58 |
| Lumens | 8162.85 |
| Efficacy | 98.83 |
| Replaces Up To | 250W MH |
| Colour Temp | 3K, 4K*, 5K |
| Operating Temp | -40°C to 40°C |
| Voltage | 120-277V*, 347V |
| LED Life | 100,000 hours |
| Housing Material | Die Cast Aluminum |
| Lens Material | Polycarbonate |
| Total Harmonic Distortion | 9.11 |
| Power Factor | 0.983 |
| Mounting Options | Post Top Mount, Wall Mount with decorative arm |
| Finish | Sandtex Black, Custom Colours |
| Beam Pattern | T5*, T2 |

* Standard configuration

## DESCRIPTION

Ideal for pathway and area lighting applications, the Coachman LED is the new improved energy efficient version of the original lantern style HID fixture.

## APPLICATIONS

Office Complexes | Campuses | Parks | Townhouses | Walkways

## FEATURES

- Available in 3 wattages - 41W, 83W and 113W
- Cast aluminum housing with clear lens.
- Post top mount to fit a 3 inch diameter tenon.
- Decorative wall mount bracket available as an accessory.
- Traditional lantern style design.
- 90° or 180° house side cut off shield options available.
- Pole options include DPP4 and SPR.

## DIMENSIONS

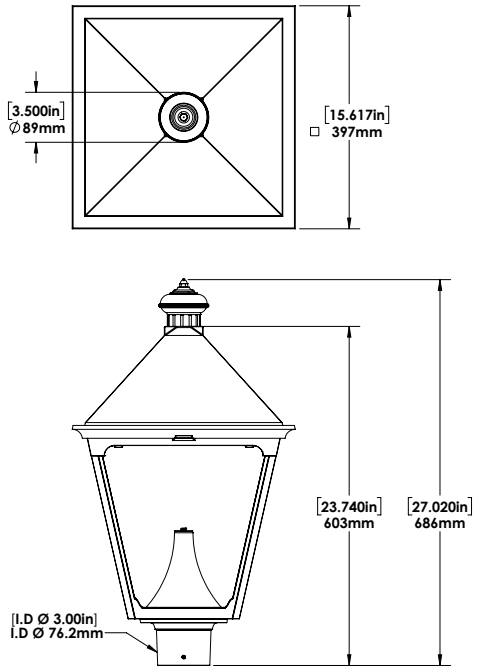


**With Decorative Top (Standard)**

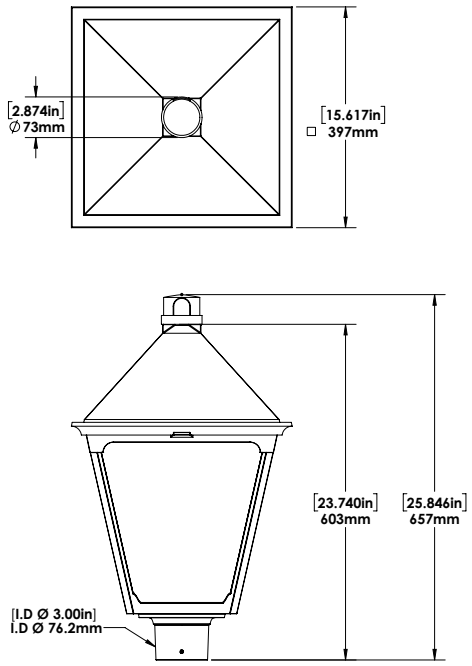


**With Photocell (Option)**

**DECORATIVE ARM 3"R BLACK**

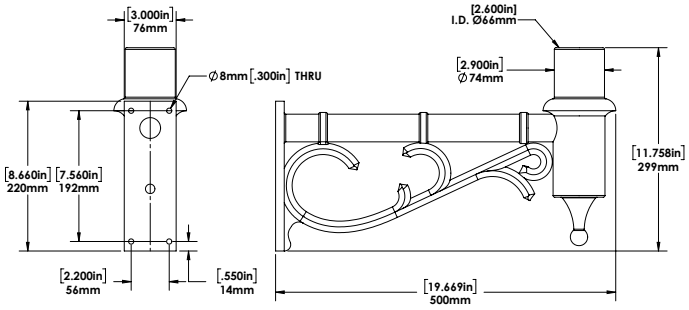

## HOUSE SIDE CUT OFF SHIELD

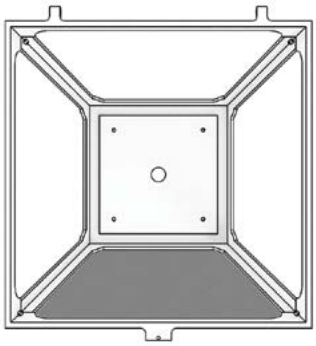

**C90**
90° House Side
Cut-off shield

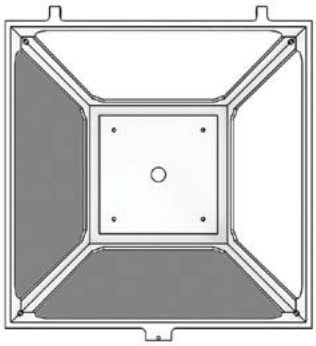

**C180**
180° House Side
Cut-off shield

## POLE OPTIONS

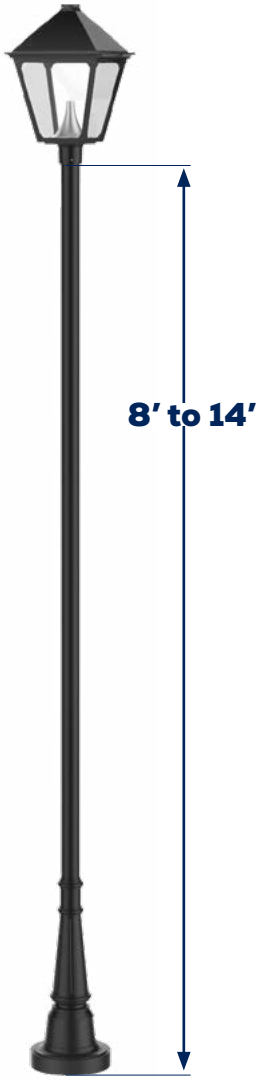


**DPP4**

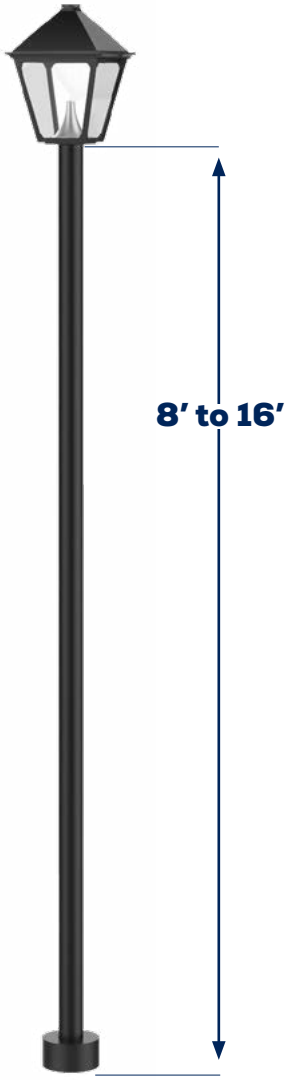


**SPR**

## SPECIFICATIONS

| MODEL DESCRIPTION | VOLTAGE (V) | INPUT POWER (W) | LIGHT OUTPUT | EFFICACY (Lm/W) | THD | PF | CCT(K) | CRI |
|---|---|---|---|---|---|---|---|---|
| CCM-LED80-B-3K-T5-XXX-DIM | 120-277 | 82.58 | 8151.53 | 98.70 | 9.11 | 0.983 | 3041 | 72.92 |
| CCM-LED80-B-4K-T5-XXX-DIM | 120-277 | 82.58 | 8162.85 | 98.83 | 9.11 | 0.983 | 3956.5 | 73.56 |
| CCM-LED80-B-5K-T5-XXX-DIM | 120-277 | 82.58 | 8174.18 | 98.97 | 9.11 | 0.983 | 4872 | 74.2 |
| CCM-LED80-B-3K-T2-XXX-DIM | 120-277 | 82.58 | 7766.60 | 94.03 | 9.11 | 0.983 | 3041 | 72.92 |
| CCM-LED80-B-4K-T2-XXX-DIM | 120-277 | 82.58 | 7777.39 | 94.17 | 9.11 | 0.983 | 3956.5 | 73.56 |
| CCM-LED80-B-5K-T2-XXX-DIM | 120-277 | 82.58 | 7788.17 | 94.30 | 9.11 | 0.983 | 4872 | 74.2 |
| CCM-LED80-C-3K-T5-XXX-DIM | 347 | 83.2 | 8156.02 | 98.02 | 12.02 | 0.9679 | 3041 | 72.92 |
| CCM-LED80-C-4K-T5-XXX-DIM | 347 | 83.2 | 8167.35 | 98.16 | 12.02 | 0.9679 | 3956.5 | 73.56 |
| CCM-LED80-C-5K-T5-XXX-DIM | 347 | 83.2 | 8178.68 | 98.30 | 12.02 | 0.9679 | 4872 | 74.2 |
| CCM-LED80-C-3K-T2-XXX-DIM | 347 | 83.2 | 7771 | 93.4 | 12.32 | 0.987 | 3041 | 72.92 |
| CCM-LED80-C-4K-T2-XXX-DIM | 347 | 83.2 | 7781.67 | 93.52 | 12.32 | 0.987 | 3956.5 | 73.56 |
| CCM-LED80-C-5K-T2-XXX-DIM | 347 | 83.2 | 7792.46 | 93.65 | 12.32 | 0.987 | 4872 | 74.2 |

**Legend**
B - 120-277V, C -347V
3K - 3000K, 4K - 4000K, 5K - 5000K
T5 - Type V, T2-Type 2
XXX - Finish
DIM - Dimmable

## ORDERING GUIDE

| CCM | | | | | | | | |
|---|---|---|---|---|---|---|---|---|
| | WATTS | VOLTAGE | COLOUR TEMP. | BEAM PATTERN | FINISH | DIMMING | CONTROLS | OPTIONS |
| | LED80 | B - 120 - 277V*<br>C - 347V | 3K - 3000K<br>4K - 4000K*<br>5K- 5000K | T5 - TYPE V*<br>T2 - TYPE II | SBK - SANDTEX BLACK*<br>CC - CUSTOM COLOUR | DIM - 0 - 10V DIMMING* | PC - Photocell | C90 - 90° House Side Cut-off shield<br>C180 - 180° House Side Cut-off shield<br>FR - Frosted Lens |

* Standard configuration

## FIELD INSTALLED ACCESSORIES

**CHECK THE ACCESSORIES YOU WISH TO ORDER:**

☐ 096801 DECORATIVE ARM 3"R BLACK