Project: | Type: | Date: | Notes:

Area Light

Tennis & Pickleball Court Light

TPCL-LED



A high-performance LED area lighting solution engineered for large-scale outdoor applications, including tennis and pickleball courts. The fixture utilizes a fixed CCT to maximize efficacy and long-term performance, combined with an advanced optical system designed to deliver precise light control, excellent uniformity, and optimized lighting layouts across expansive areas. Multiple mounting options provide design flexibility for a wide range of site conditions. Standard features include selectable wattage for application-specific tuning and a wide input voltage range of 120–347V, making it well suited for municipal and commercial installations.

IDEAL APPLICATIONS

- Commercial Plazas
- Dealerships
- Transit Stations
- Sports Lighting
- Tennis Court Lighting
- Pickleball Court Lighting

SPECIFICATIONS

	TPCL1-LED400A240	TPCL2-LED600A360
PERFORMANCE		
Light Output*	69 000 / 54 000 / 40 300 lm	100 000 / 79 000 / 59 000 lm
Efficacy	172 lm/W	
CCT	4000K, 5000K	
Beam Distribution	Type III	
BUG Rating	B4-U0-G4	B5-U0-G5
LED Life time (L80)	>100 000 hours	
CRI	> 70	
Replaces Up to	750W MH	1000W MH
ELECTRICAL		
Wattage	400 / 320 / 240W	600 / 480 / 360W
Voltage	120-347V	
Power Factor	>0.99	
THD	<10%	
Dimming	0-10 V (10-100% Dimming, Dim to off)	
Surge Protection	6kV Internal (with driver), 10kV External (added to every fixture). Optional 20kV Surge Protection	
Cable	3ft SOOW 3x16 AWG	

CONSTRUCTION	
Housing	Die cast aluminum
Lens	Polycarbonate
Finish	Bronze, Custom Finish
Paint Specification	Corrosion-resistant polyester powder coating (500hr salt spray tested)
Mounting	Yoke Mount, Slip Fitter, Trunnion, Direct Mount for Round or Square pole

FACTORY INSTALLED

Twist Lock Photocell, Optical House Side Cutoff

AMBIENT OPERATING TEMPERATURE

-40°C to 50°C (-40°F to 122°F)

CERTIFICATIONS

UL certified as per UL 1598 & CSA 22.2 No. 250.0, IK08, IP66, 3G Vibration Tested, DLC

Note: Reported performance values were tested at 120V and 5000K

ORDERING GUIDE

		H		T3			DIM

Fixture	Wattage	Voltage	Colour Temp.	Optics	Shield	Finish	Dimming
TPCL1	LED400A240	H - 120-347V	4K - 4000K*	T3 - Type III	Blank - None*	BRZ - Bronze*	DIM - 0-10V dimming
TPCL2	LED600A360		5K - 5000K		HCO - Optical House Side Cutoff	CST - Custom Colour	

Controls	Surge Protection
Blank - None*	SP10 - 10kV Surge Protection*
PC - Twistlock Photocell	SP20 - 20kV Surge Protection
7PIN - 7PIN Receptacle	

* Standard Configuration

STOCK CODE	DESCRIPTION
087083	TPCL1-LED400A240-H-4K-T3-BRZ-DIM-SP10
087084	TPCL2-LED600A360-H-4K-T3-BRZ-DIM-SP10

ACCESSORIES SOLD SEPARATELY					
020056	TPCL TRUNNION MOUNT BRZ	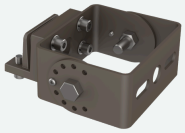	020083	TPCL YOKE MOUNT BRZ	
020081	TPCL SLIP FITTER MOUNT BRZ	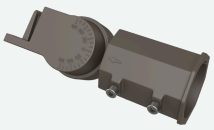	020084	TPCL ADJUSTABLE DIRECT MOUNT BRZ	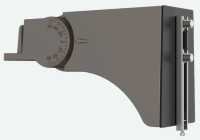
020082	TPCL HOUSE SIDE SHIELD BRZ	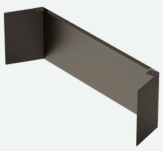			

DIMENSIONS

DIRECT MOUNT

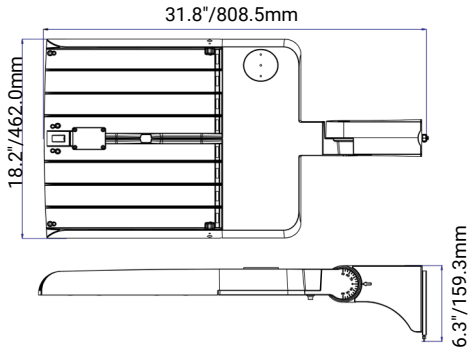

TPCL1

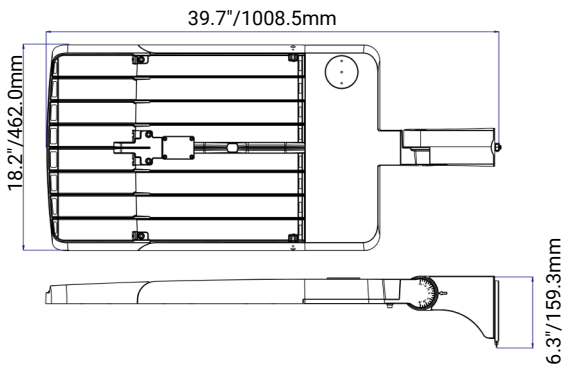

TPCL2

SLIP FITTER

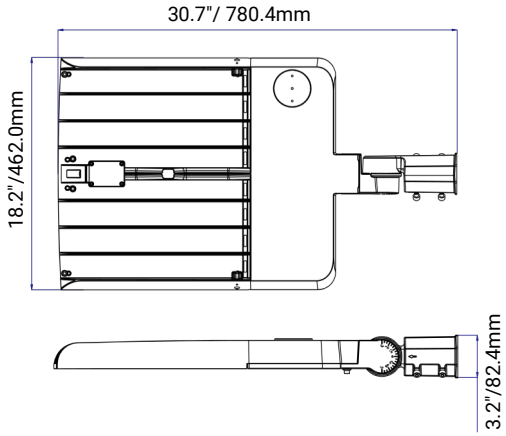

TPCL1

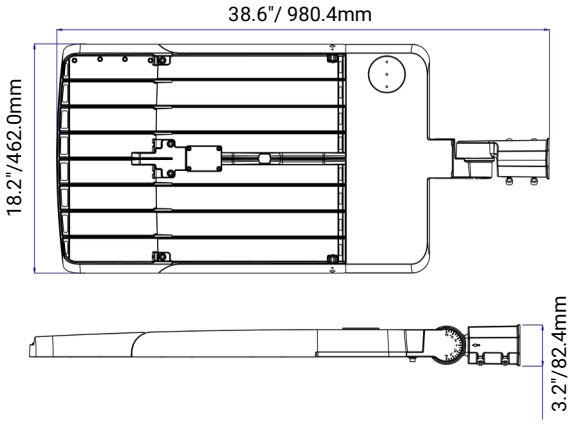

TPCL2

YOKE

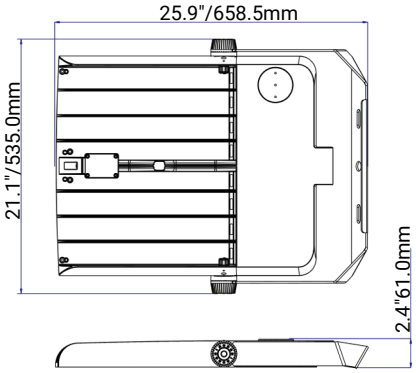

TPCL1

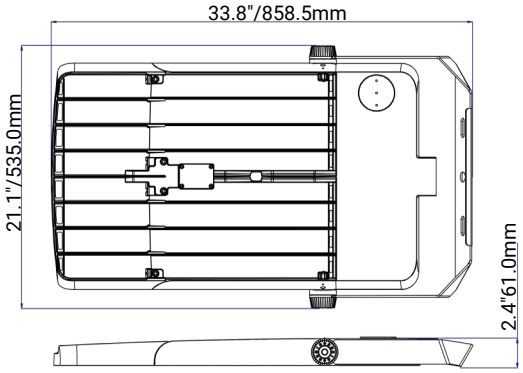

TPCL2

TRUNNION

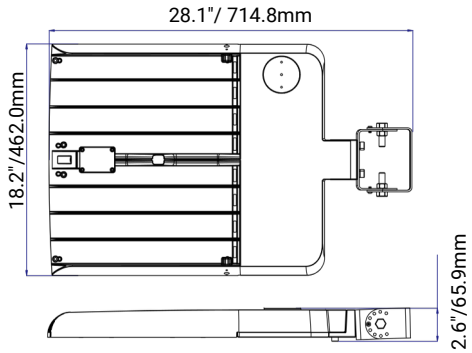

TPCL1

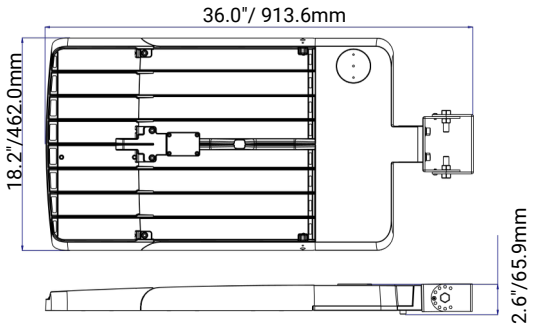

TPCL2

ADDITIONAL DETAILS

AMPERAGE DRAW & SURGE PROTECTION						
	CURRENT					SURGE PROTECTION
	120V	208V	240V	277V	347V	120-347V
TPCL1-LED400A240	3.7A	2.1A	1.9A	1.6A	1.3A	6kV Driver internal + 10kV external (20kV Optional)
TPCL2-LED600A360	5.6A	3.2A	2.8A	2.4A	1.9A	

TM-21 ESTIMATED LUMEN MAINTENANCE			
	50,000 Hours	75,000 Hours	100,000 Hours
TPCL1-LED400A240	90.4%	85.8%	81.4%
TPCL2-LED600A360			

Life hours are derived from IESNA LM-80 testing report and projected per IESNA TM-21 calculations.

EPA (ft^2)			
	90° Tilt	45° Tilt	0° Tilt
TPCL1	3.16	2.40	0.30
TPCL2	4.19	3.27	0.30

WEIGHT				
	With Direct Mount	With Slipfitter	With Yoke	With Trunnion
TPCL1	21.9lbs (9.9kg)	22.3lbs (10.1 kg)	25.0lbs (11.3kg)	22.7lbs (10.3kg)
TPCL2	25.2lbs (11.4kg)	25.6lbs (11.6kg)	28.2lbs (12.8kg)	26.0lbs (11.8kg)

LIGHTING LAYOUT

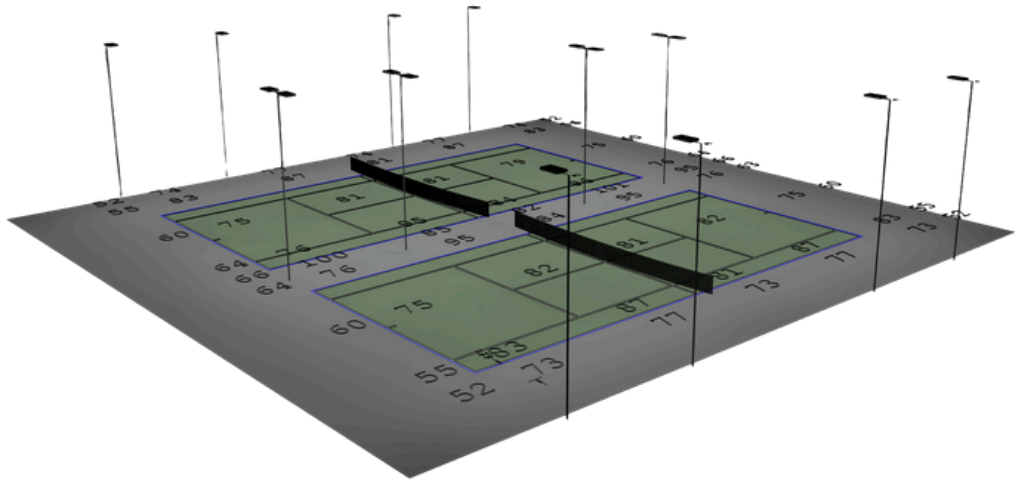

TWO TENNIS COURTS - CLASS II						
DESCRIPTION				QTY	LLF	MH
TPCL2-LED600A360-H-5K-T3-BRZ-HSS (480W)				16	0.95	27
ILLUMINANCE	AVG (FC)	MAX (FC)	MIN (FC)	AVG/MIN	MAX/MIN	CV
Courts	82	96	75	1.10	1.28	0.08
Out of Bounds	68	101	52	1.32	1.94	0.19

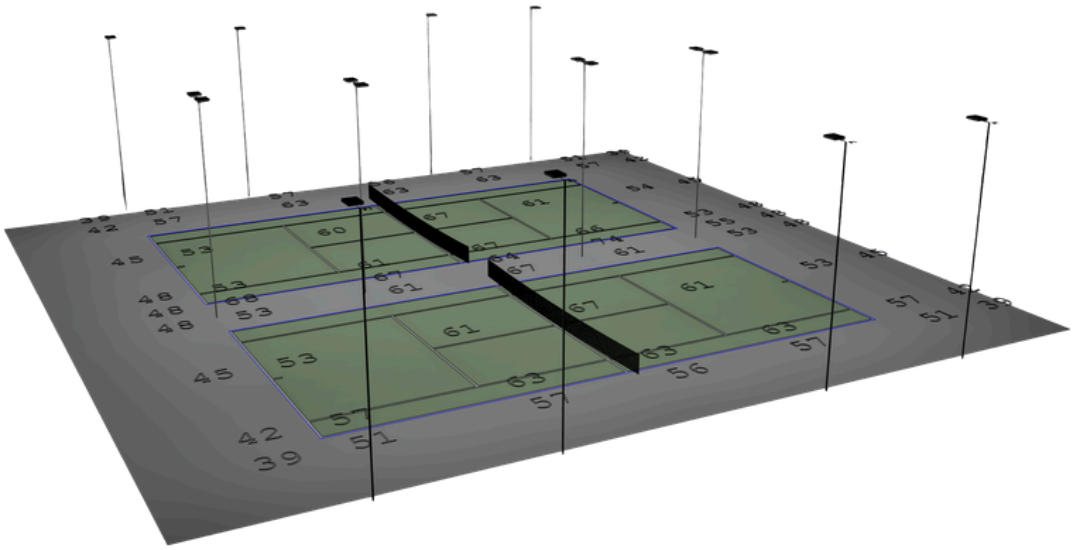

TWO TENNIS COURTS - CLASS III						
DESCRIPTION				QTY	LLF	MH
TPCL1-LED400A240-H-5K-T3-BRZ-HSS (400W)				16	0.95	30
ILLUMINANCE	**AVG (FC)**	**MAX (FC)**	**MIN (FC)**	**AVG/MIN**	**MAX/MIN**	**CV**
Courts	60	67	53	1.13	1.26	0.08
Out of Bounds	50	74	39	1.29	1.90	0.17

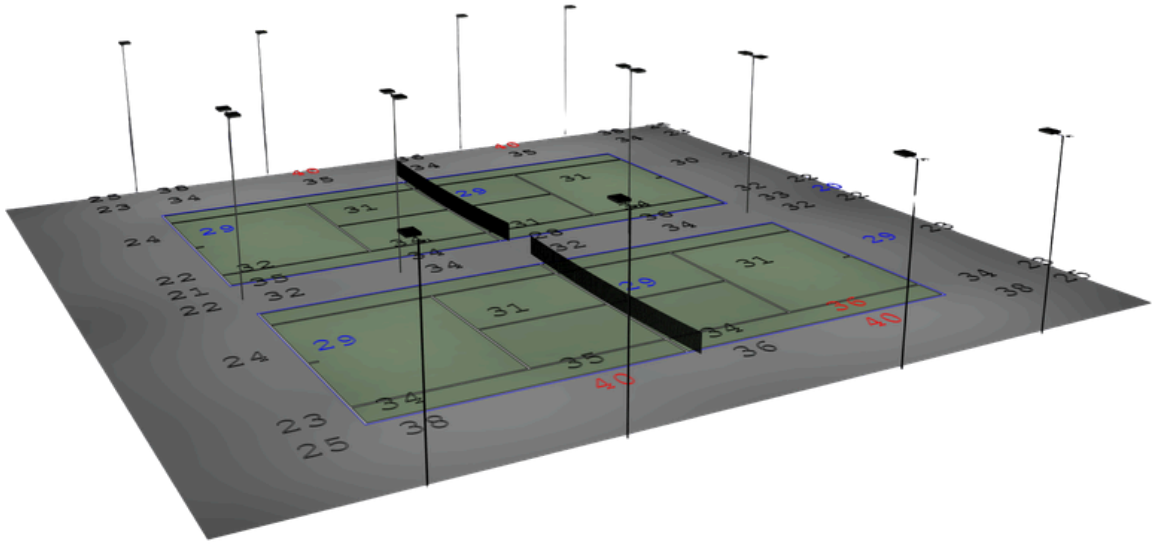

TWO TENNIS COURTS - CLASS IV						
DESCRIPTION				QTY	LLF	MH
TPCL1-LED400A240-H-5K-T3-BRZ-HSS (240W)				16	0.95	24
ILLUMINANCE	**AVG (FC)**	**MAX (FC)**	**MIN (FC)**	**AVG/MIN**	**MAX/MIN**	**CV**
Courts	32	36	29	1.12	1.24	0.07
Out of Bounds	29	40	20	1.46	2.00	0.24

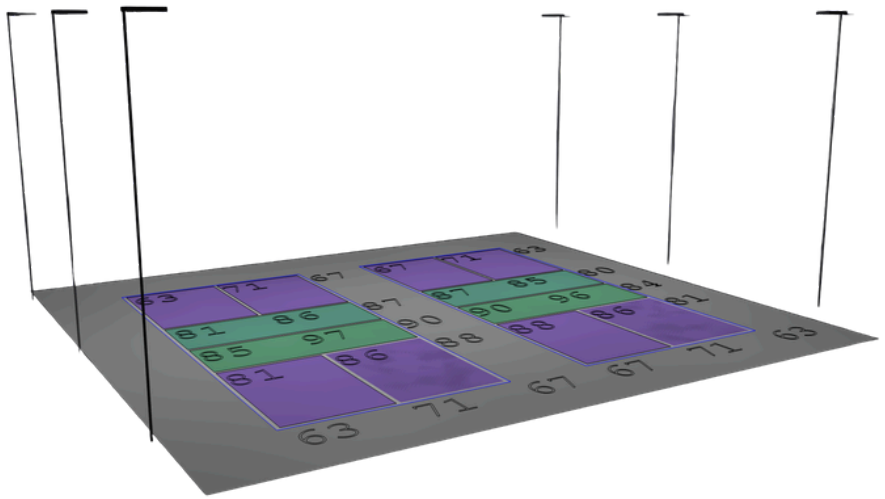

TWO PICKLEBALL COURTS - CLASS II						
DESCRIPTION				QTY	LLF	MH
TPCL2-LED600A360-H-5K-T3-BRZ-HSS (600W)				6	0.95	30
ILLUMINANCE	AVG (FC)	MAX (FC)	MIN (FC)	AVG/MIN	MAX/MIN	CV
Courts	79	97	63	1.25	1.54	0.13

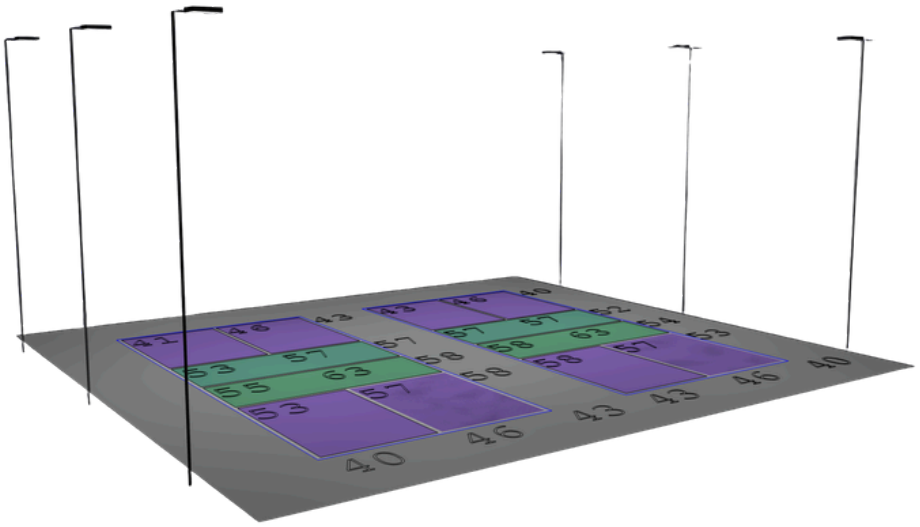

TWO PICKLEBALL COURTS - CLASS III						
DESCRIPTION				QTY	LLF	MH
TPCL1-LED400A240-H-5K-T3-BRZ-HSS (400W)				6	0.95	30
ILLUMINANCE	AVG (FC)	MAX (FC)	MIN (FC)	AVG/MIN	MAX/MIN	CV
Courts	51	63	40	1.28	1.58	0.14

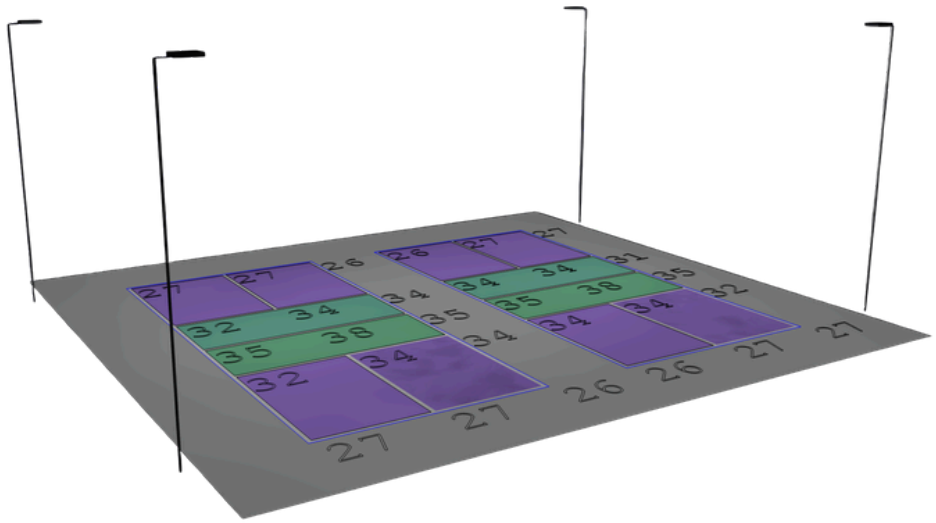

TWO PICKLEBALL COURTS - CLASS IV						
DESCRIPTION				QTY	LLF	MH
TPCL1-LED400A240-H-5K-T3-BRZ-HSS (400W)				4	0.95	27
ILLUMINANCE	AVG (FC)	MAX (FC)	MIN (FC)	AVG/MIN	MAX/MIN	CV
Courts	31	38	26	1.20	1.46	0.13

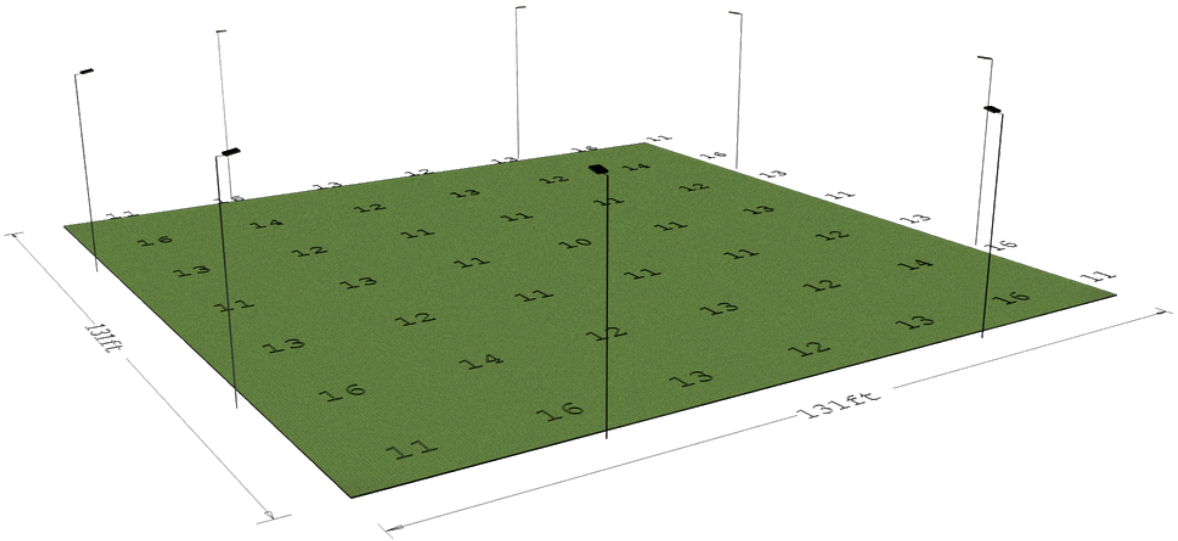

LAWN BOWLING						
DESCRIPTION				QTY	LLF	MH
TPCL1-LED400A240-H-5K-T3-BRZ-HSS (240W)				8	0.95	33
ILLUMINANCE	AVG (FC)	MAX (FC)	MIN (FC)	AVG/MIN	MAX/MIN	CV
Courts	13	16	10	1.27	1.60	0.14