Project: | Type: | Date: | Notes:

CLB-LED
Ceiling Light



Elevate your space with versatility and style. CLB combines sleek design with customizable functionality of CCT and lumen selection for tailored ambiance. With wide voltage compatibility and easy installation, achieving perfect lighting has never been easier.

IDEAL APPLICATIONS

- Entrances
- Townhouses
- Stairwells
- Campuses
- Schools
- Shopping Malls

SPECIFICATIONS

	CLB-LED25A15	CLB2-LED45A25
PERFORMANCE		
Light Output(Lumen Selectable)	3700/3000/2200 lm	6500/5200/3700 lm (Lumen Selectable)
Efficacy	149 lm/W	
CCT	3000/4000/5000K (CCT Selectable)	
Beam Distribution	Type V - 360 Degree	
LED Lifetime (L80)	>100,000 Hrs	
CRI	76	
BUG Rating	B1-U3-G1	B2-U3-G2
ELECTRICAL		
Wattage	25/20/15W	45/35/25W
Voltage	120-347V	
Surge Protection	4kV (Built-in Driver) as per ANSI/C82.77-5-207	
Power Factor	0.95	
THD	<10%	
CONSTRUCTION		
Housing	Die-cast aluminum	
Lens	Frosted Polycarbonate	
Conduit entry	2x 1/2" NPT	
Paint	Corrosion resistant polyester powder coating	
Ambient Operating Temperature	-40℃ to 40℃	
CERTIFICATIONS		
cULus Listed for Canada and USA, per UL 1598, CSA C22.2 No. 250.0		
IP66, DLC premium		
CONTROLS		
0-10V Dimming (10%-100%)		

ORDERING GUIDE

		H	VK		DIM	
Fixture	**Wattage**	**Voltage**	**Colour Temp.**	**Finish**	**Dimming**	**Lens**
CLB CLB2	LED25A15 LED45A25	H - 120-347V	VK - Colour Selectable (3000K/ 4000K/ 5000K)	BRZ - Bronze* CST - Custom Finish	DIM - 0-10V Dimming	FR - Frosted Lens CL - Clear Lens**

*Standard configuration
**For CLB-LED25A15 only

STOCK CODE	
083544	CLB-LED25A15-H-VK-BRZ-DIM-FR
083545	CLB2-LED45A25-H-VK-BRZ-DIM-FR

MAX AMPERAGE DRAW (A)					
	120V	208V	240V	277V	347V
CLB-LED25A15	0.22	0.13	0.11	0.09	0.08
CLB2-LED45A25	0.39	0.23	0.20	0.17	0.14

LUMEN MAINTENANCE		
L90	L80	L70
50,000	100,000 Hrs	160,000 Hrs

Life hours are derived from IESNA LM-80 testing report and projected per IESNA TM-21 calculations.

DIMENSIONS

CLB-LED25A15

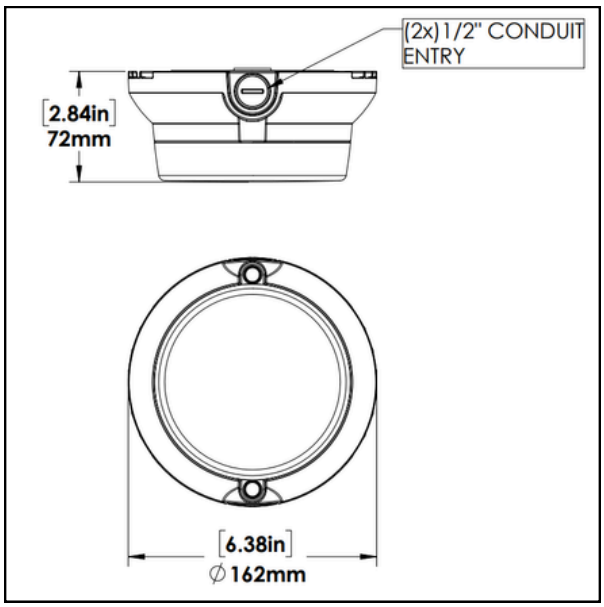

CLB2-LED45A25

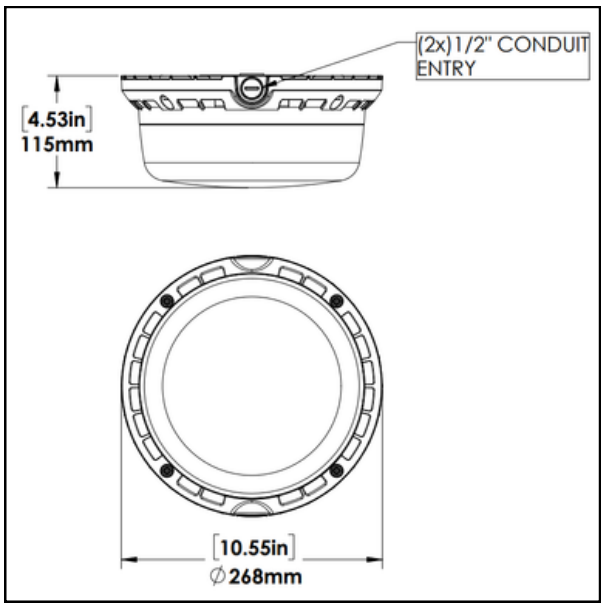

PHOTOMETRIC PLOTS

CLB-LED25A15

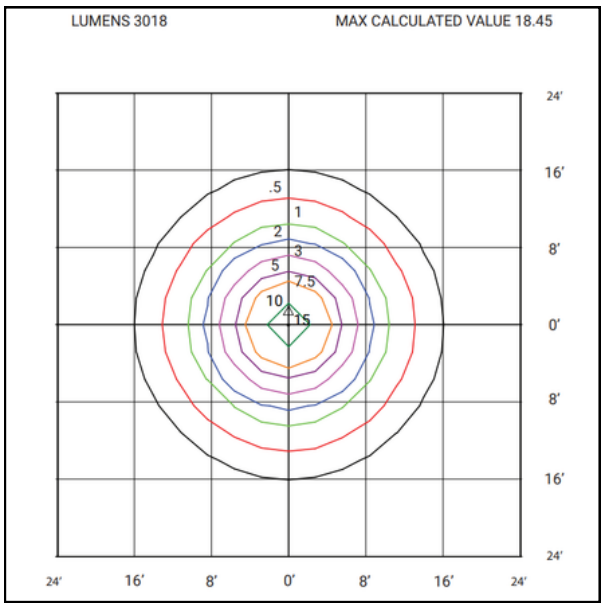

CLB2-LED45A25

